SALES DRAWING SALES DRAWING

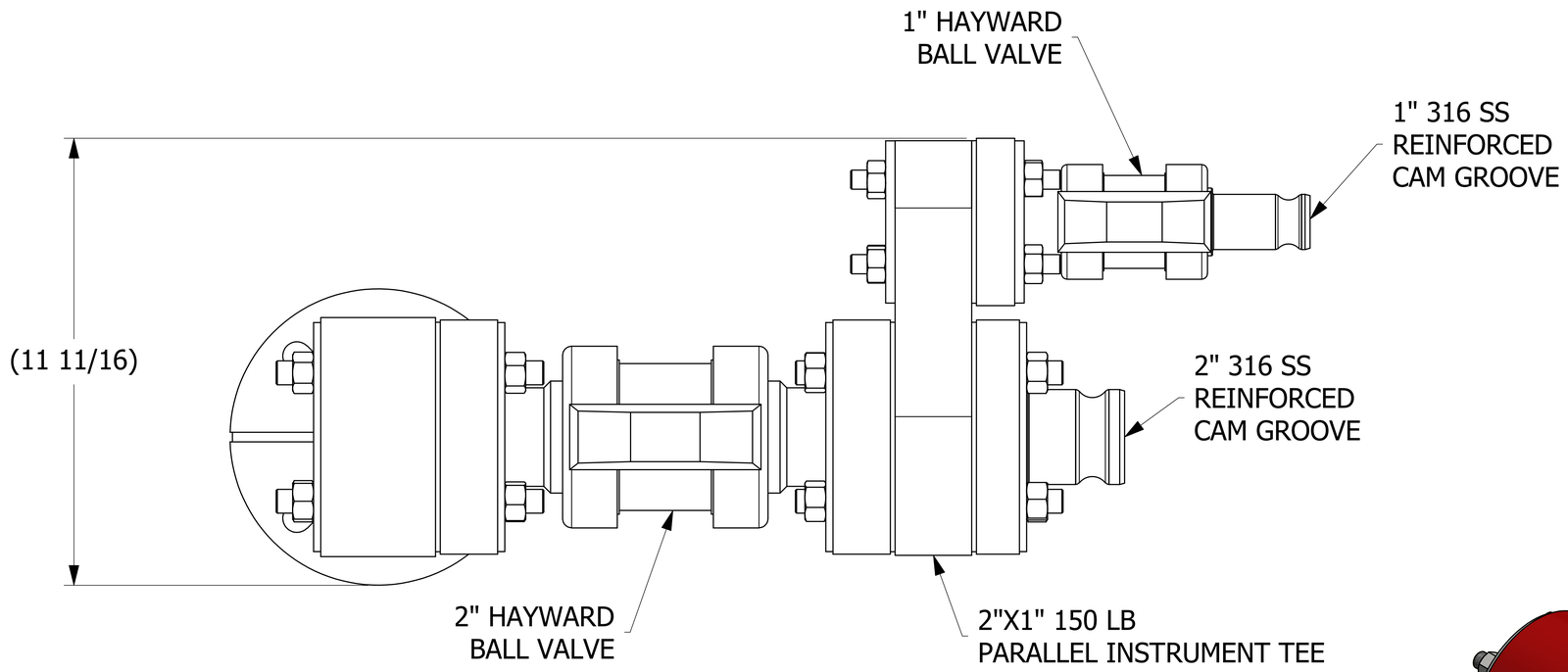

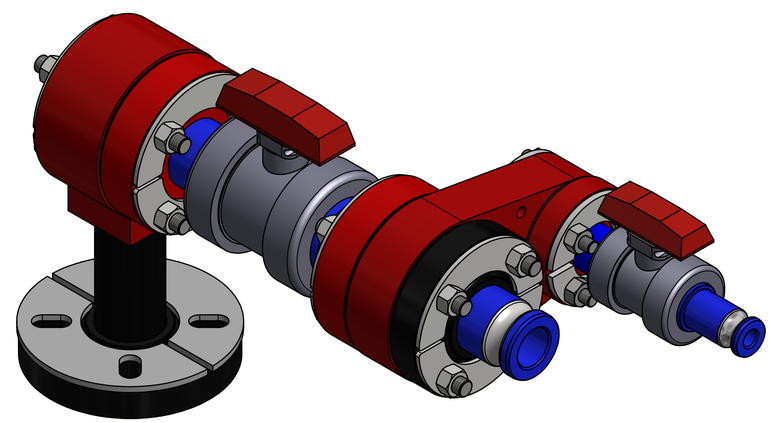

ISOMETRIC VIEW

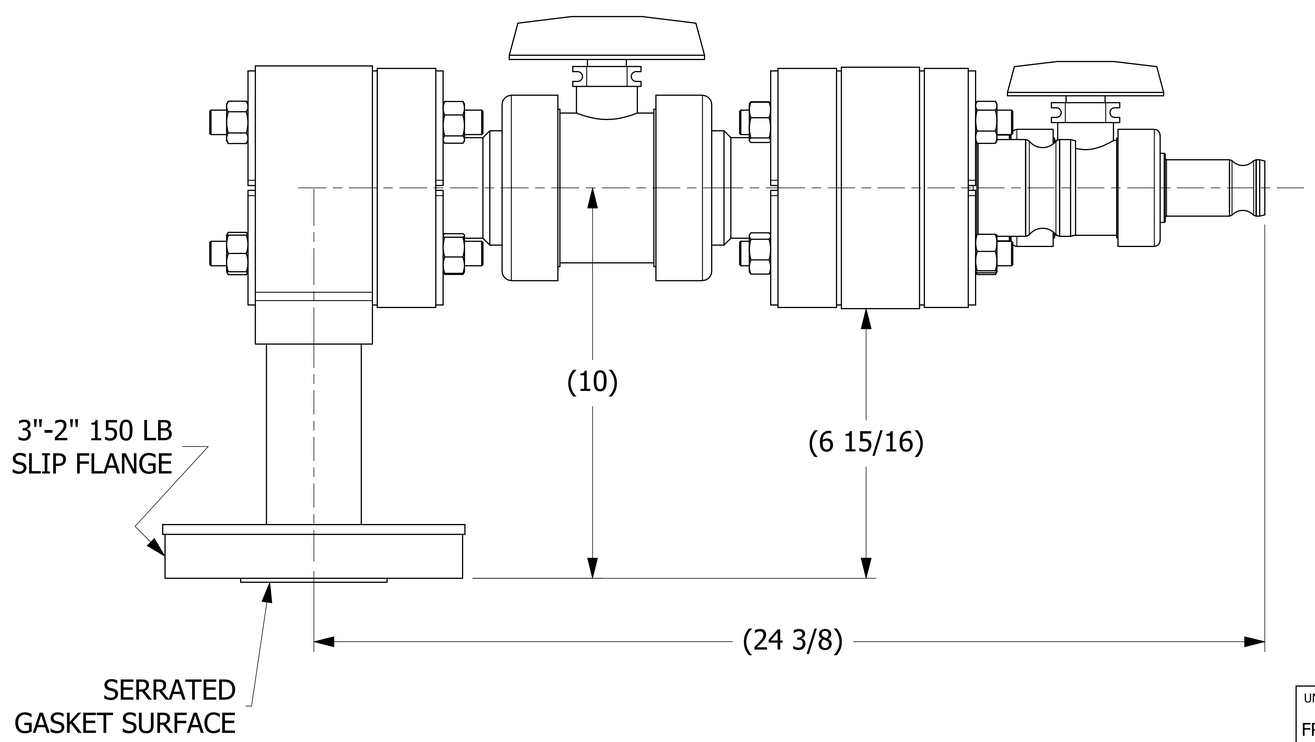

NOTES:
1. GASKET MATERIAL IS BLACK VITON B.
2. APPROXIMATE WEIGHT IS 33 LB.

REV	BY	DATE	DESCRIPTION
A	TAK	4-12-16	RELEASED FOR PRODUCTION

UNLESS OTHERWISE SPECIFIED
DIMENSIONAL TOLERANCES
FRACTIONAL: ±1/16
X.XX: ±.03
X.XXX: ±.015
ANGULAR: ±1°
DEBURR ALL SHARP EDGES.
ALL MACHINED SURFACES TO HAVE A 125 RMS FINISH UNLESS NOTED OTHERWISE.
THIRD ANGLE PROJECTION

DRAWN BY:	TAK
CHECKED BY:	JRO
PROTOTYPE BY:	TAK
PROTOTYPE DATE:	3/3/2016
APPROVED FOR PRODUCTION BY:	TAK
PRODUCTION DATE:	4/12/2016

SALCO PRODUCTS, INC.

PART NAME: UNLOADING ADAPTER 2"

MATERIAL: SALCO PE/PE/SS/PVC

PROJECT #: H1602291 | SHEET #: 1 OF 1 | SCALE: 2:3

DRAWING #: E43367 | PART #: HSCSLSHMULA15

THIS PRINT, PROPERTY OF SALCO PRODUCTS INC, CONTAINS PROPRIETARY INFORMATION AND MUST NOT BE COPIED, REPRODUCED, OR USED DETRIMENTALLY TO OUR INTEREST.

SALES DRAWING SALES DRAWING